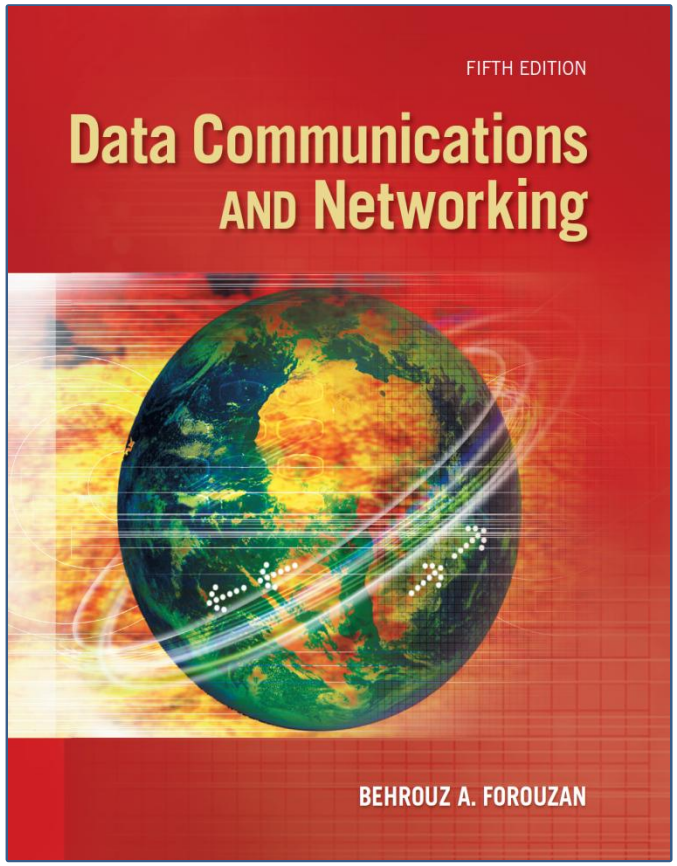

Network Services

Lecturer: Dr. Khaled BinAbdl

Lecture 4

Network Address Translation (NAT)

- The **distribution** of IP addresses through **ISPs** has created a new **problem**.

- The **ISP** may **not be able** to **grant** the demand of **IP** addresses because they already been **allocated** to other networks or **subscribers**.

Network Address Translation (NAT)

– The **business** can use **20** (or 25) addresses from the **private** block addresses for internal communication; **5** addresses for **universal** communication can be assigned by the **ISP**.

Private Addresses		
Class	**RFC 1918 Internal Address Range**	**CIDR Prefix**
A	10.0.0.0–10.255.255.255	10.0.0.0/8
B	172.16.0.0–172.31.255.255	172.16.0.0/12
C	192.168.0.0–192.168.255.255	192.168.0.0/16

Network Address Translation (NAT)

- In **most** situations, however, only a **portion** of **computers** in a small network need **access** to the **Internet at the same time**.

- For **example**, assume that in a **small** business with **20** computers the **maximum** number of computers that **access the Internet at the same time** is only **4**.
  - **Most** of the **computers** are either doing some **task** that does not need Internet access or **communicating** with each other.

Network Address Translation

- Network Address Translation (NAT): Is a technology allows a **site** to use :
  - a set of **private** addresses for **internal** communication and
  - a set of **global Internet** addresses (**at least one**) for communication with the **rest** of the **world**.

- NAT **allows** computers with **private** IP addresses to access the **Internet**

NAT

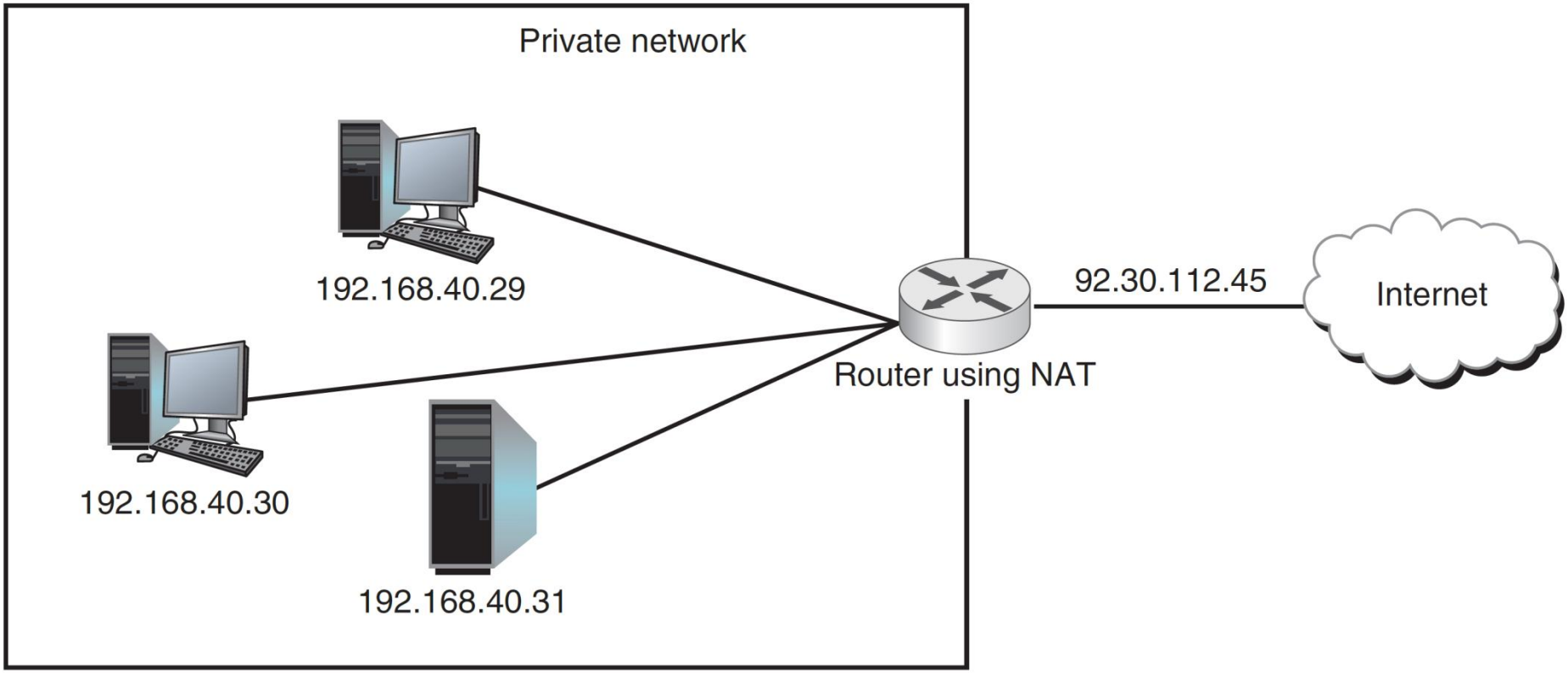
Private network
192.168.40.29
192.168.40.30
192.168.40.31
Router using NAT
92.30.112.45
Internet

Address Translation

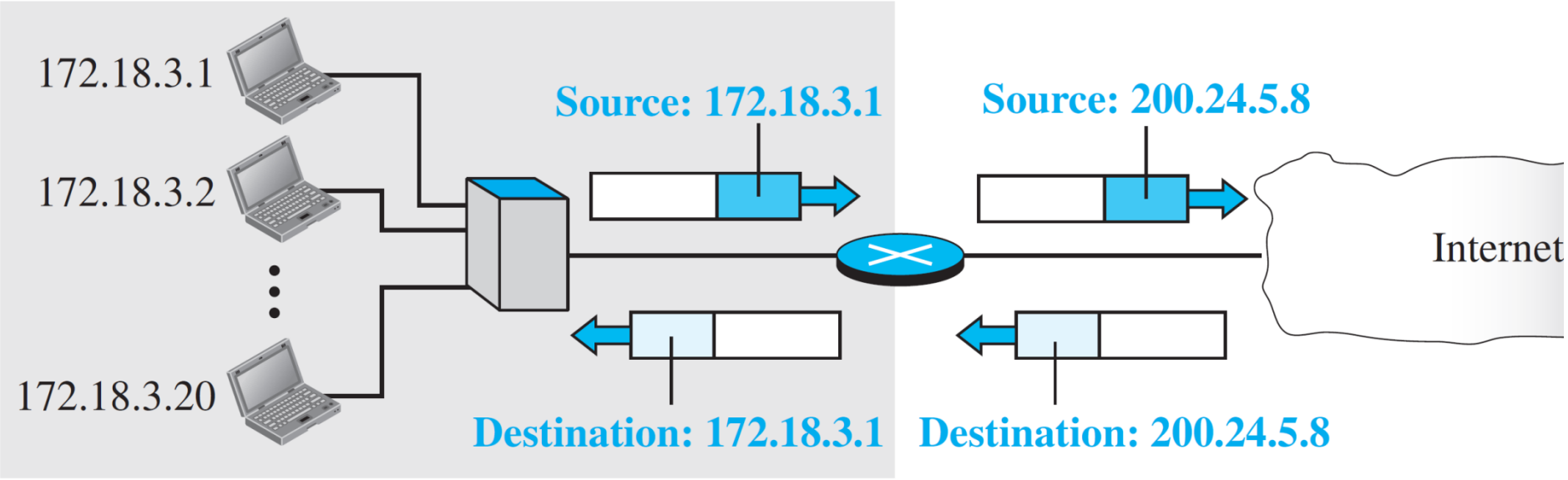

Site using private addresses

Types of Address Translation*

- **Static NAT**
- **Dynamic NAT**
- **Overloading (PAT)**

*Ref: Todd Lammle, CCNA Routing and Switching Study Guide, 2013

Static NAT

- This type of **NAT** is designed to allow **one-to-one** mapping between **local** and **global** addresses.

- Keep in **mind** that the static version requires you to have one real Internet **IP address** for **every host** on your network.

Dynamic NAT

- This type **maps** a **local** IP address to a **global** IP address **from out of a pool** of global IP addresses.

- **Drawback**: **Limited** number of local hosts can **connect** to outside **at the same time**.

Overloading (PAT)

- This is the **most popular** type of NAT configuration.
- It is a form of **dynamic** NAT.
- It maps **multiple local** IP addresses to a **single global** IP address (**many-to-one**) by using **different source ports**.
- It's also **known** as *Port Address Translation (**PAT**) or NAT Overload.*
- Using **PAT** allows **thousands** of users to **connect** to the Internet using only one **global** IP address.

Basic NAT Translation

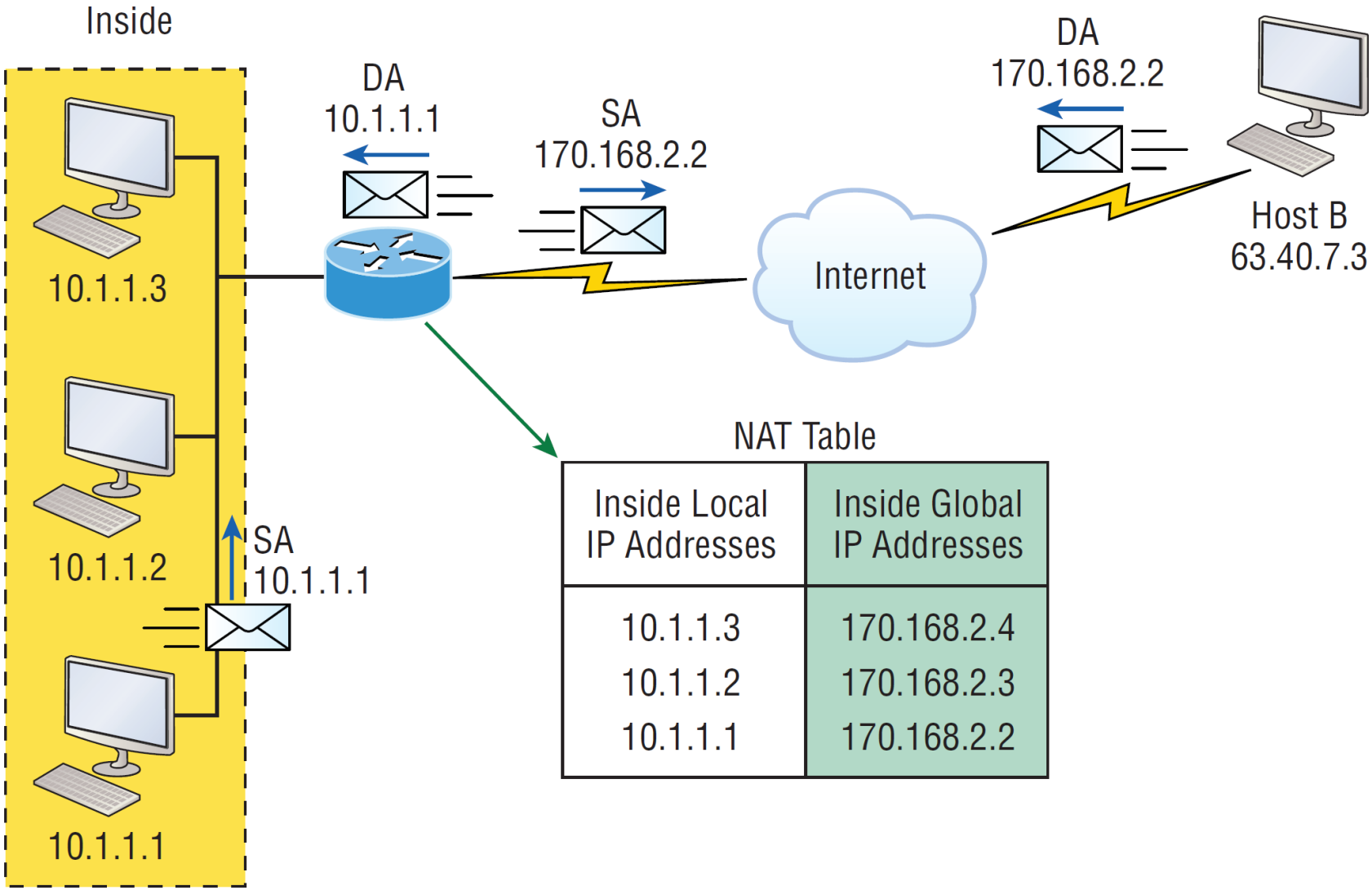

NAT Table

Inside Local IP Addresses	Inside Global IP Addresses
10.1.1.3	170.168.2.4
10.1.1.2	170.168.2.3
10.1.1.1	170.168.2.2

NAT overloading (PAT)

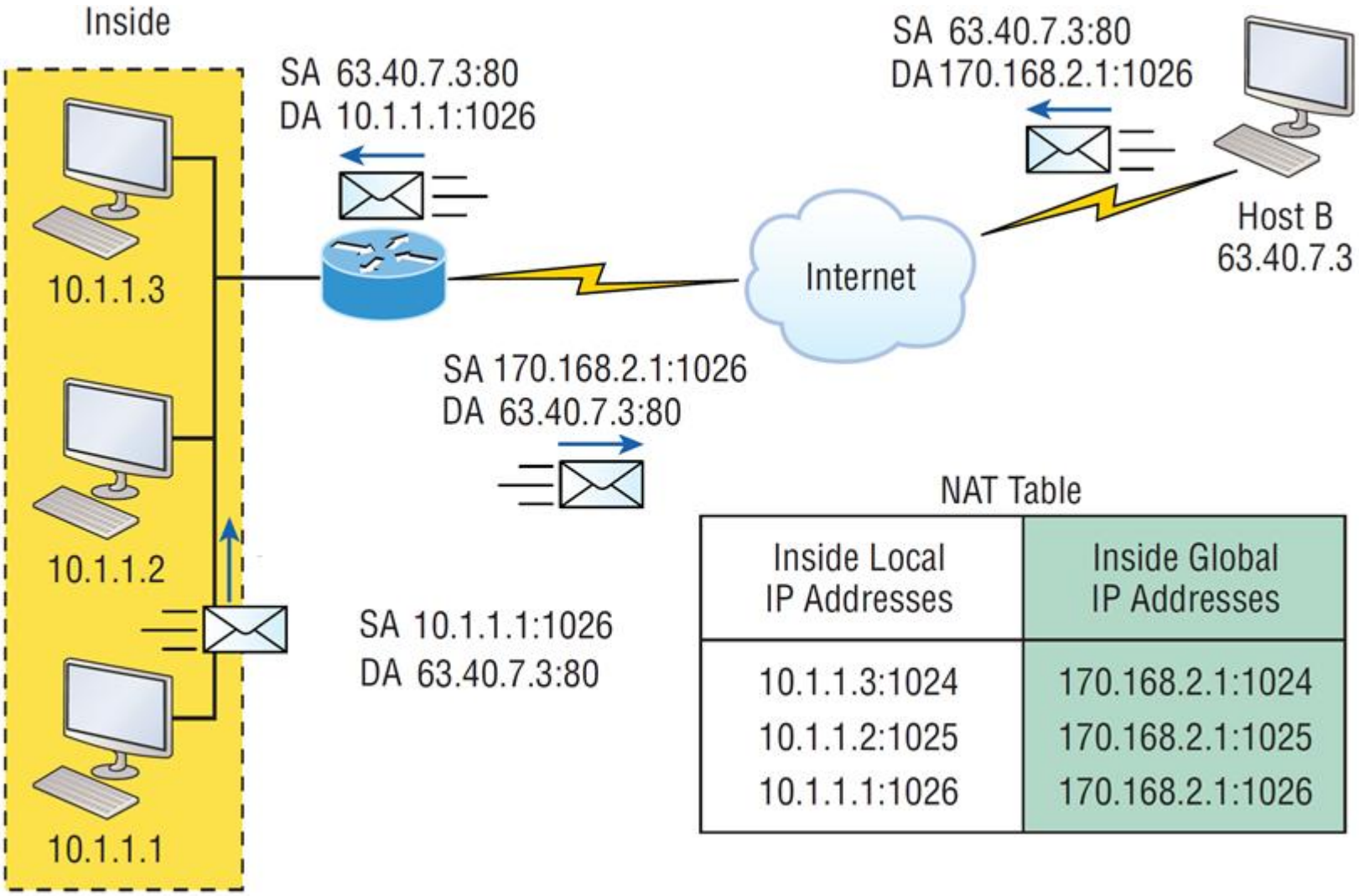

NAT Table

Inside Local IP Addresses	Inside Global IP Addresses
10.1.1.3:1024	170.168.2.1:1024
10.1.1.2:1025	170.168.2.1:1025
10.1.1.1:1026	170.168.2.1:1026

Address Translation Example

NAT translation table	
WAN side	LAN side
138.76.29.7, 5001	10.0.0.1, 3345
. . .	. . .

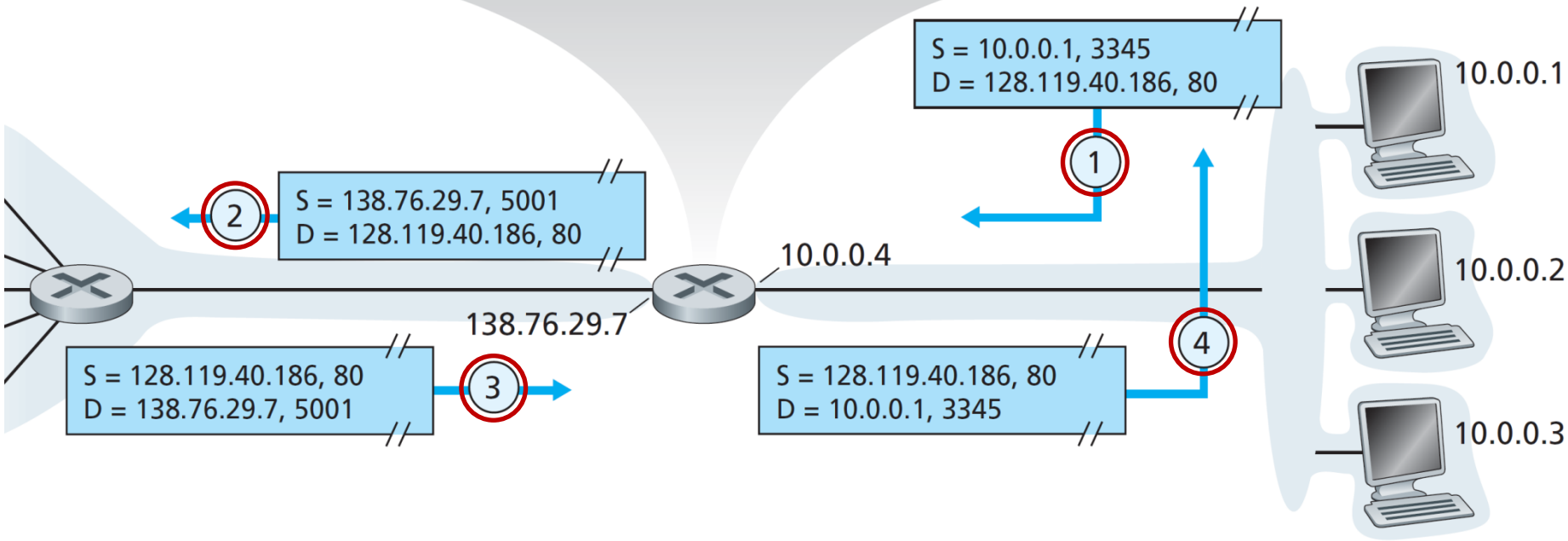

World Wide Web

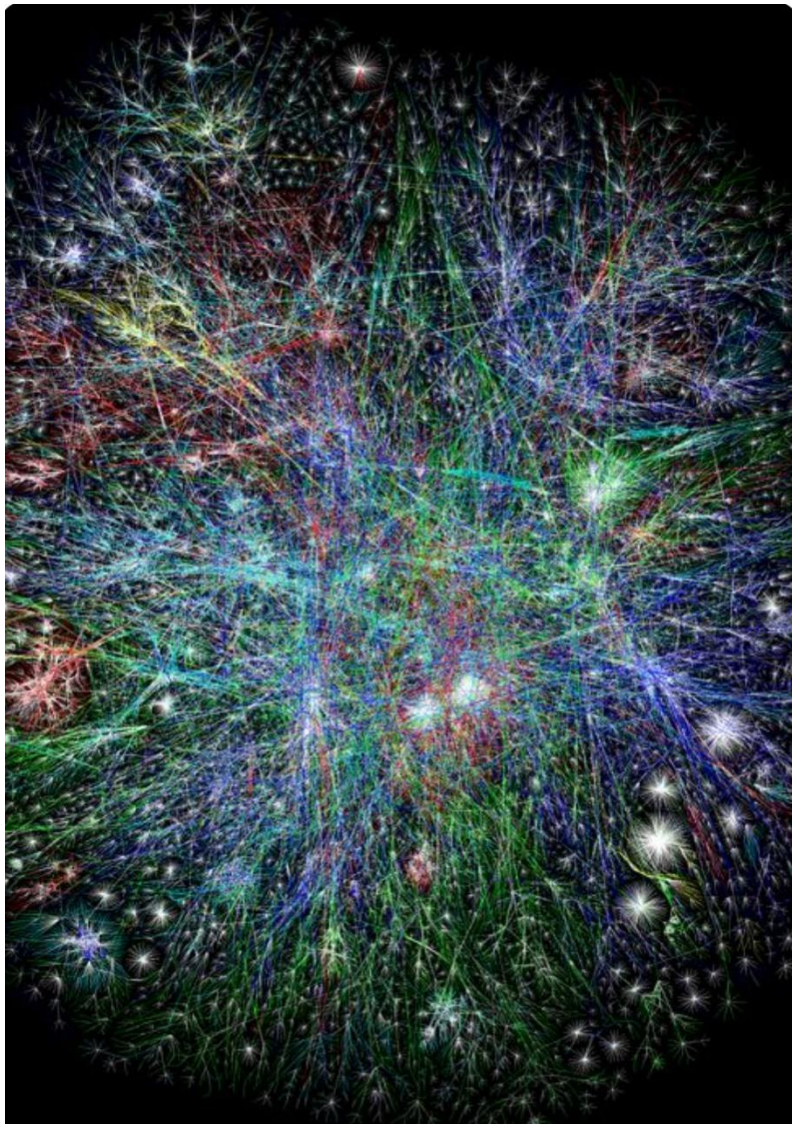

- (abbreviated WWW or Web).

- **Visualizations** of the **14 billion** pages that make up the network of the web.
  - Image via **Opte** Project.
  - Source: www.pinterest.ca

World Wide Web

- The idea of the Web was first **proposed** by **Tim Berners-Lee** in **1989** for research.

Berners-Lee, 2005

- The **commercial** Web started in the early 1990s.

- The Web **today** is a **repository** of **information** in which the documents, called ***web pages.***

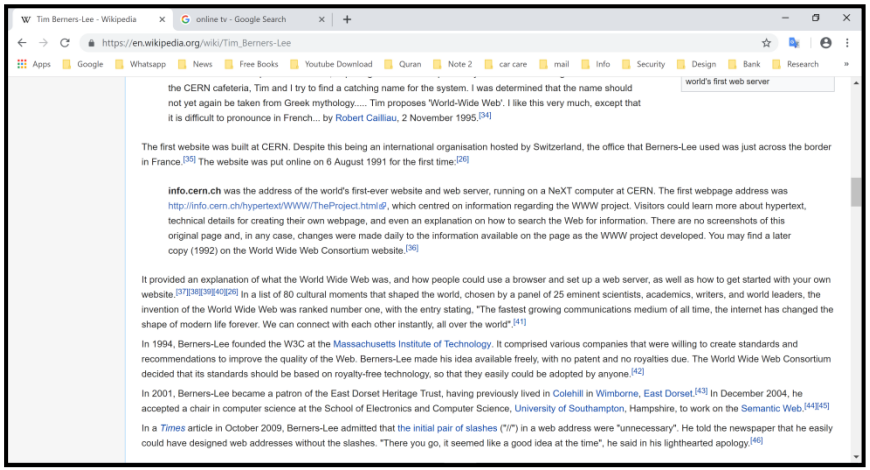

Tim Berners-Lee - Wikipedia | online tv - Google Search

https://en.wikipedia.org/wiki/Tim_Berners-Lee

Apps | Google | Whatsapp | News | Free Books | Youtube Download | Quran | Note 2 | car care | mail | Info | Security | Design | Bank | Research

world's first web server

the CERN cafeteria, Tim and I try to find a catching name for the system. I was determined that the name should not yet again be taken from Greek mythology..... Tim proposes 'World-Wide Web'. I like this very much, except that it is difficult to pronounce in French... by Robert Cailliau, 2 November 1995.[34]

The first website was built at CERN. Despite this being an international organisation hosted by Switzerland, the office that Berners-Lee used was just across the border in France.[35] The website was put online on 6 August 1991 for the first time.[26]

info.cern.ch was the address of the world's first-ever website and web server, running on a NeXT computer at CERN. The first webpage address was http://info.cern.ch/hypertext/WWW/TheProject.html, which centred on information regarding the WWW project. Visitors could learn more about hypertext, technical details for creating their own webpage, and even an explanation on how to search the Web for information. There are no screenshots of this original page and, in any case, changes were made daily to the information available on the page as the WWW project developed. You may find a later copy (1992) on the World Wide Web Consortium website.[36]

It provided an explanation of what the World Wide Web was, and how people could use a browser and set up a web server, as well as how to get started with your own website.[37][38][39][40][26] In a list of 80 cultural moments that shaped the world, chosen by a panel of 25 eminent scientists, academics, writers, and world leaders, the invention of the World Wide Web was ranked number one, with the entry stating, "The fastest growing communications medium of all time, the internet has changed the shape of modern life forever. We can connect with each other instantly, all over the world".[41]

In 1994, Berners-Lee founded the W3C at the Massachusetts Institute of Technology. It comprised various companies that were willing to create standards and recommendations to improve the quality of the Web. Berners-Lee made his idea available freely, with no patent and no royalties due. The World Wide Web Consortium decided that its standards should be based on royalty-free technology, so that they easily could be adopted by anyone.[42]

In 2001, Berners-Lee became a patron of the East Dorset Heritage Trust, having previously lived in Colehill in Wimborne, East Dorset.[43] In December 2004, he accepted a chair in computer science at the School of Electronics and Computer Science, University of Southampton, Hampshire, to work on the Semantic Web.[44][45]

In a *Times* article in October 2009, Berners-Lee admitted that the initial pair of slashes ("//") in a web address were "unnecessary". He told the newspaper that he easily could have designed web addresses without the slashes. "There you go, it seemed like a good idea at the time", he said in his lighthearted apology.[46]

World Wide Web

Today, the **Web** is used to provide **electronic shopping** and **gaming**.

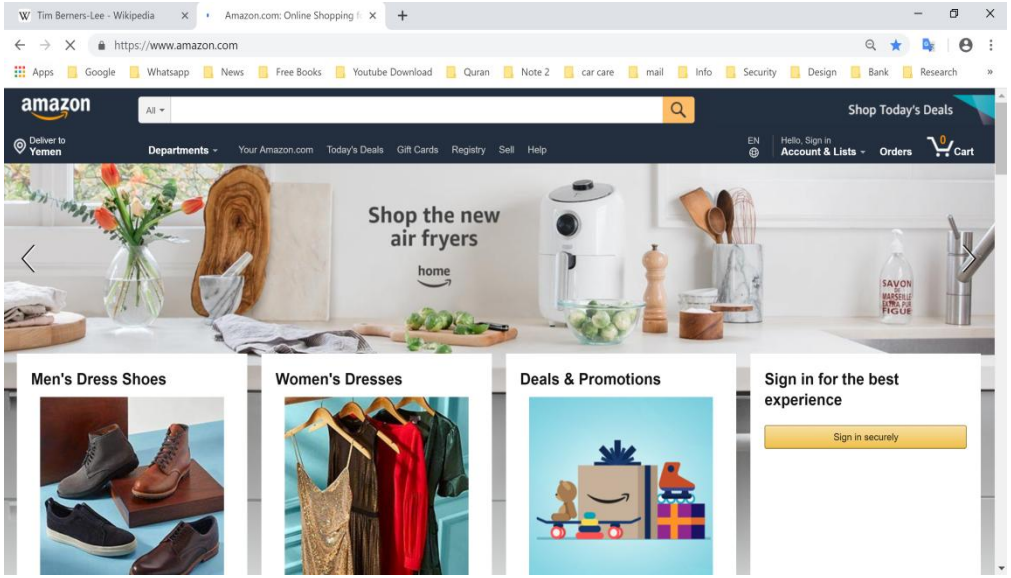

One can use the Web to **listen** to **radio** programs or view **television** programs

Web Architecture

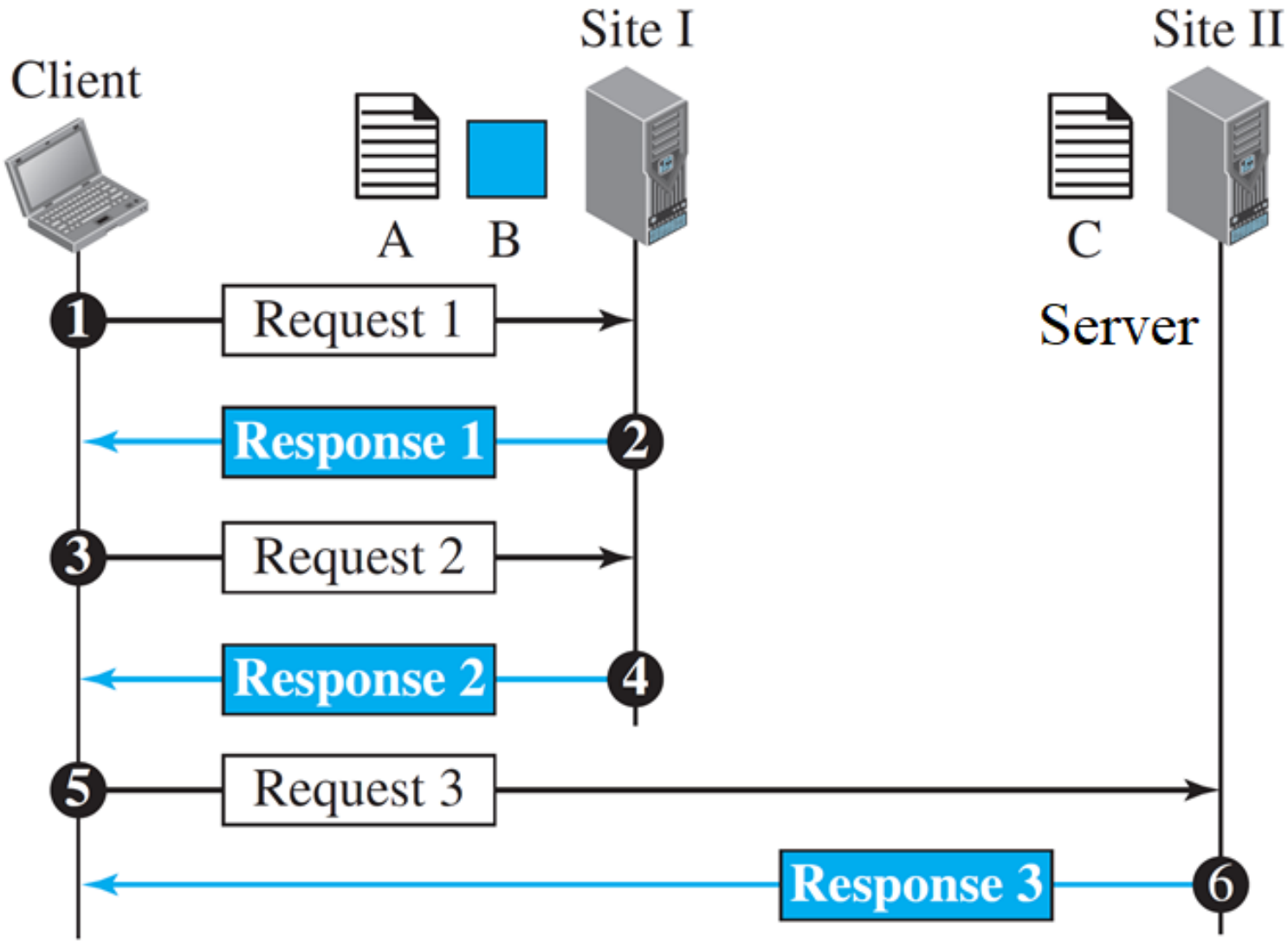

Uniform Resource Locator (URL)

– URL is an identifier to distinguish web pages.

– Contains: *host, port,* and *path*.

protocol://host/path	**Used most of the time**
protocol://host:port/path	**Used when port number is needed**

– Ex:

https://en.wikipedia.org/wiki/Hypertext_Transfer_Protocol

Web Documents

Web categories are:

- **Static page**: is **fixed-content** documents that are **created** and **stored** in a **server**.

- **Dynamic page**: is **created** by a web server **whenever** a browser **requests** the document.
  - **example** of a **dynamic** document is the **retrieval** of the **time** and **date** from a server.

- **Active page**: a **page** with a **program** or a **script** to be **run** at the **client** site.

HyperText Transfer Protocol (HTTP)

- HTTP is used to **retrieve** web **pages** from the a Web **server**.
- HTTP client **sends** a **request**; an HTTP server returns a **response**.
- HTTP server uses **port number 80**; the client uses a **temporary** port number.
- HTTP uses the services of **TCP**.
  - This means that, **before** any transaction between the **client** and the **server** can take place, a **connection** needs to be **established** between them.

HTTP Connections

– ***Non-persistent Connections:***
  - TCP connection is made for each request/response.

– ***Persistent Connections:***
  - the server **leaves** the **connection open** for more requests after sending a response.

Non-persistent Connections

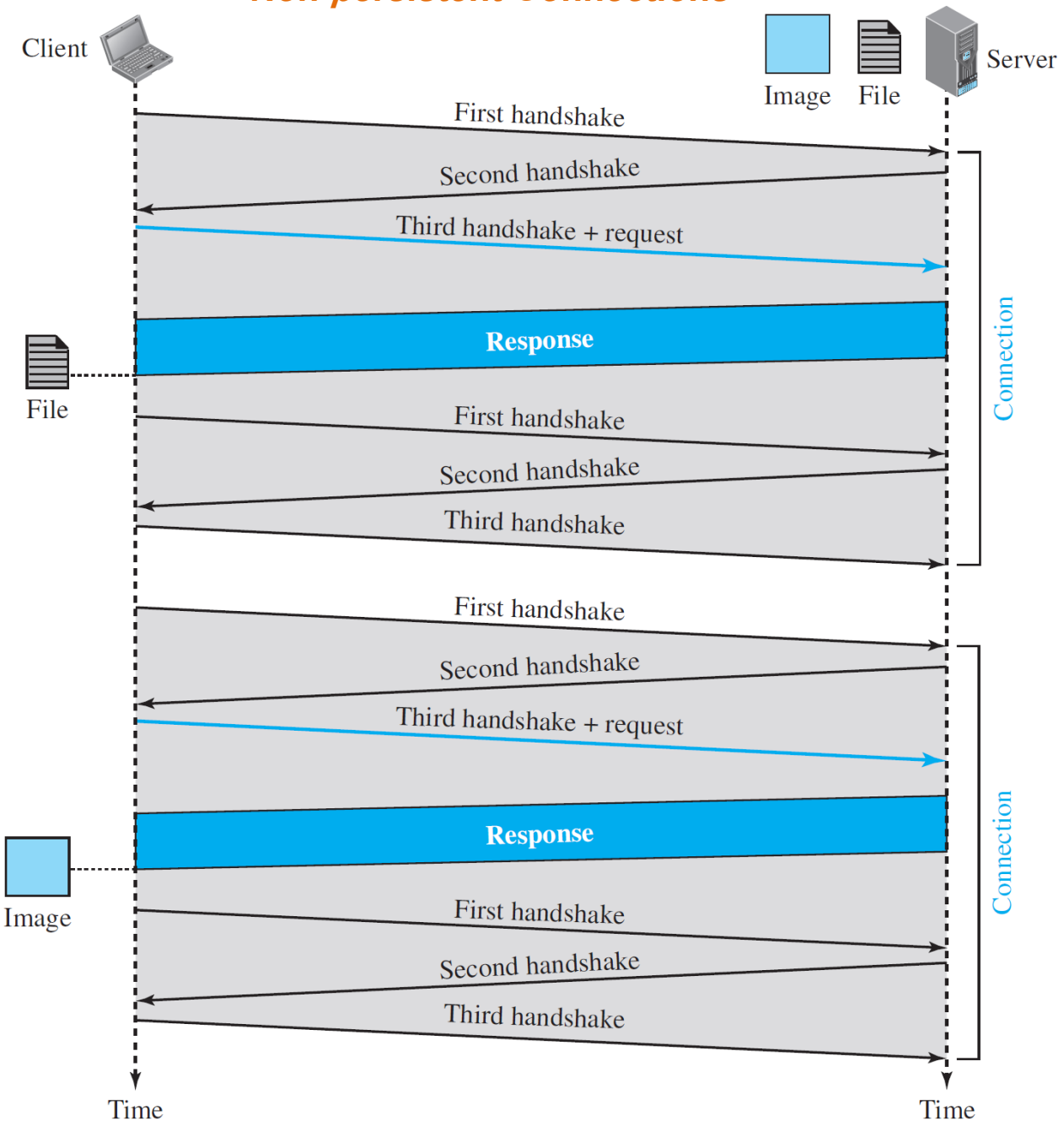

persistent Connections

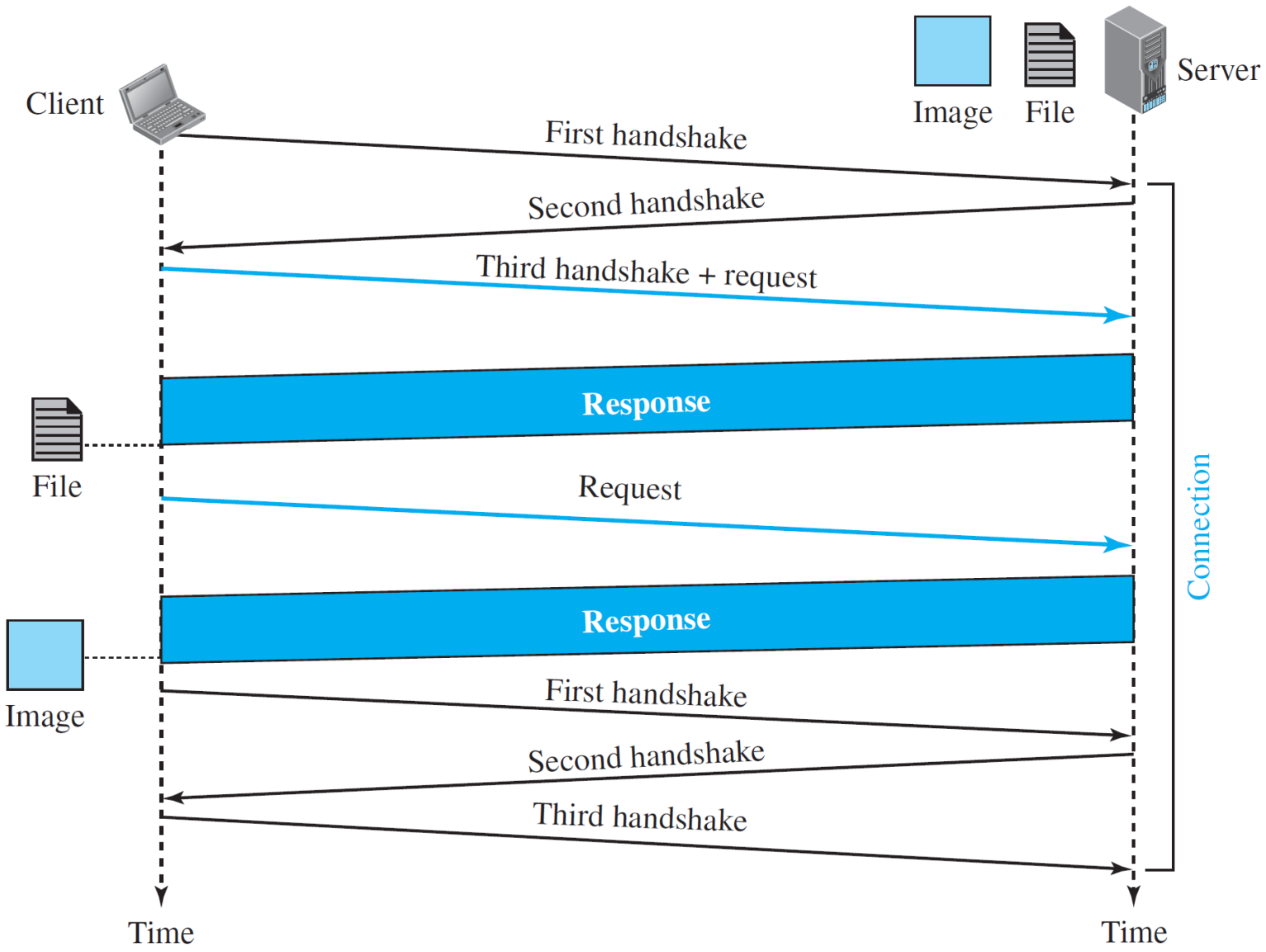

HTTP Message Formats

Figure 26.5 *Formats of the request and response messages*

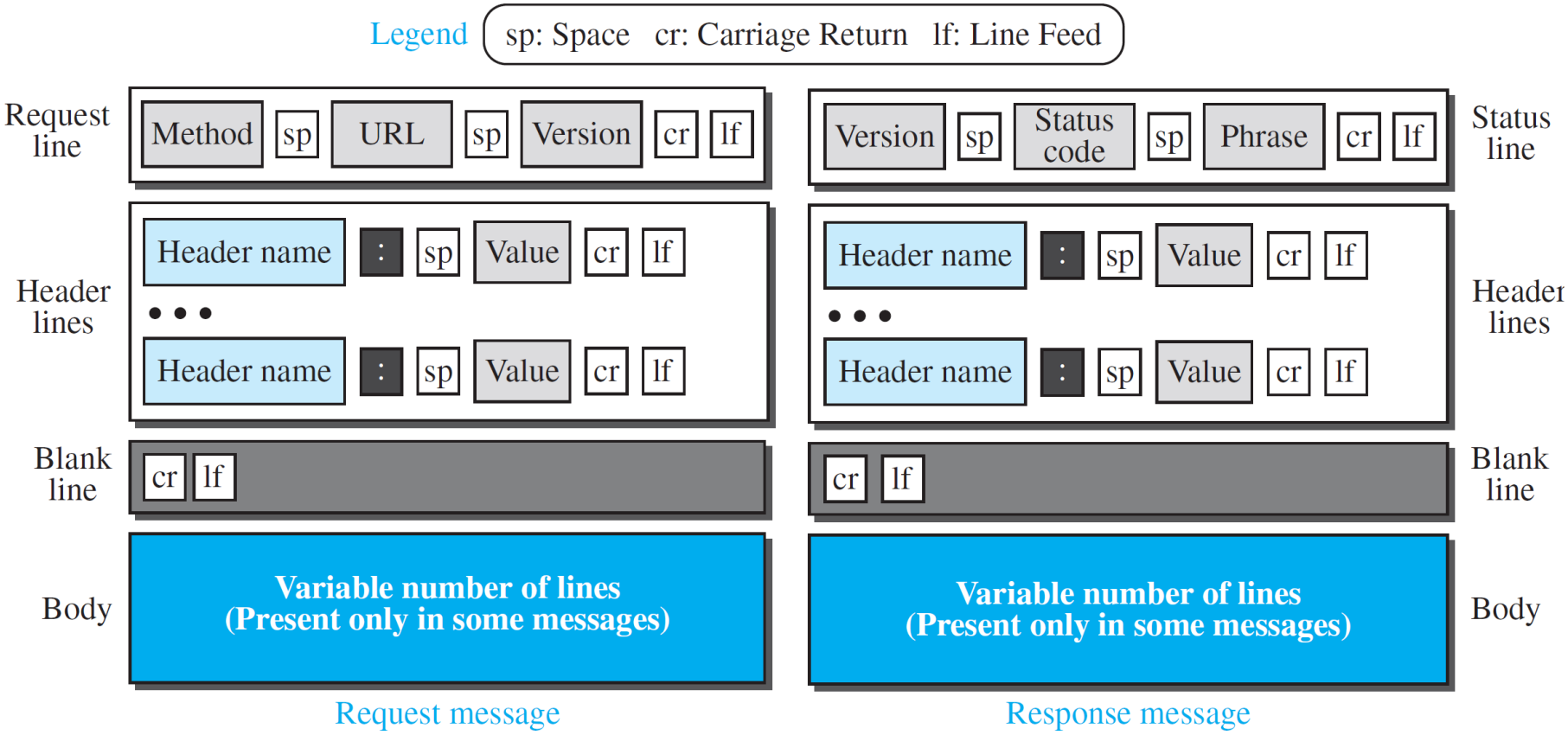

Methods

Method	*Action*
GET	Requests a document from the server
HEAD	Requests information about a document but not the document itself
PUT	Sends a document from the client to the server
POST	Sends some information from the client to the server
TRACE	Echoes the incoming request
DELETE	Removes the web page
CONNECT	Reserved
OPTIONS	Inquires about available options

Request header names

Header	*Description*
User-agent	Identifies the client program
Accept	Shows the media format the client can accept
Accept-charset	Shows the character set the client can handle
Accept-encoding	Shows the encoding scheme the client can handle
Accept-language	Shows the language the client can accept
Authorization	Shows what permissions the client has
Host	Shows the host and port number of the client
Date	Shows the current date
Upgrade	Specifies the preferred communication protocol
Cookie	Returns the cookie to the server (explained later)
If-Modified-Since	If the file is modified since a specific date

Response header names

Header	*Description*
Date	Shows the current date
Upgrade	Specifies the preferred communication protocol
Server	Gives information about the server
Set-Cookie	The server asks the client to save a cookie
Content-Encoding	Specifies the encoding scheme
Content-Language	Specifies the language
Content-Length	Shows the length of the document
Content-Type	Specifies the media type
Location	To ask the client to send the request to another site
Accept-Ranges	The server will accept the requested byte-ranges
Last-modified	Gives the date and time of the last change

GET Request Example

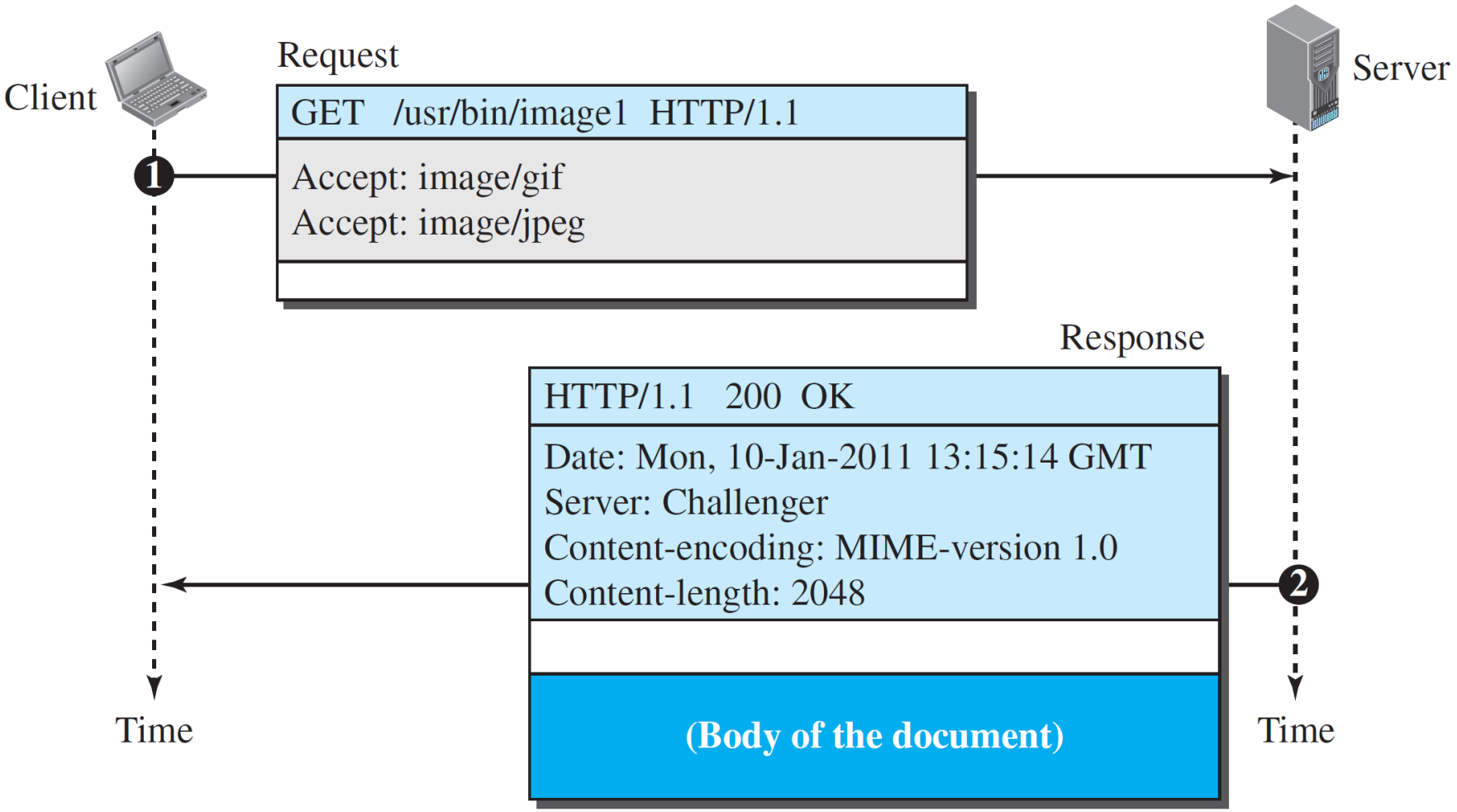

PUT Request Example

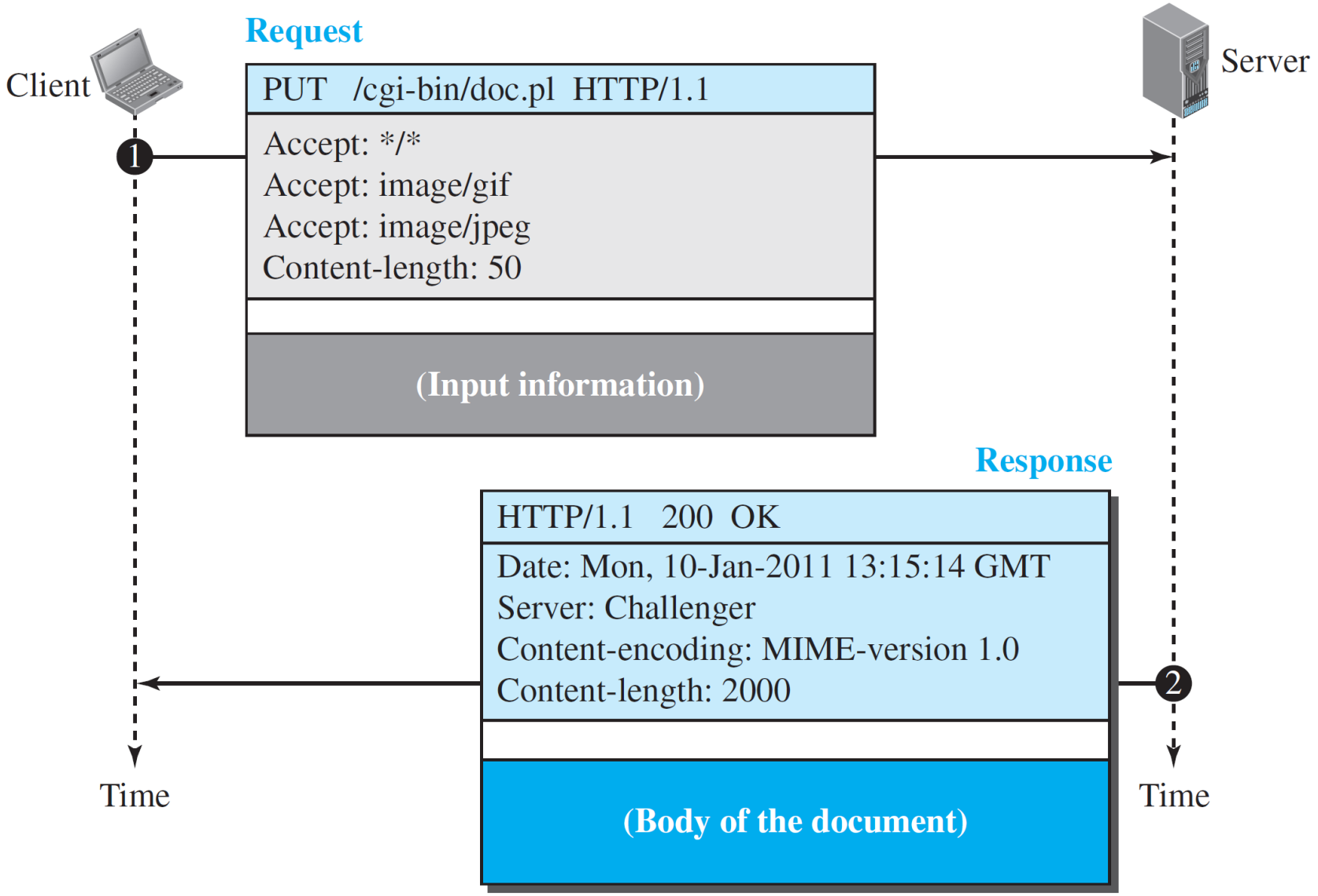

Conditional Request

- A client can add a **condition** in its **request**.
- In this case, the server will **send** the **requested** web page **if the condition is met** or inform the client otherwise.
- One of the most **common conditions** imposed by the client is the **time and date** the web page is **modified**.

Conditional Request Example

Request

GET http://www.commonServer.com/information/file1 HTTP/1.1	**Request line**
If-Modified-Since: Thu, Sept 04 00:00:00 GMT	**Header line**
	Blank line

Response

HTTP/1.1 304 Not Modified	**Status line**
Date: Sat, Sept 06 08 16:22:46 GMT	**First header line**
Server: commonServer.com	**Second header line**
	Blank line
(Empty Body)	**Empty body**

Cookies

- The HTTP was originally **designed** as a **stateless** protocol.

- **Today** the HTTP has other functions that need to **remember** some **information** about the **clients**:

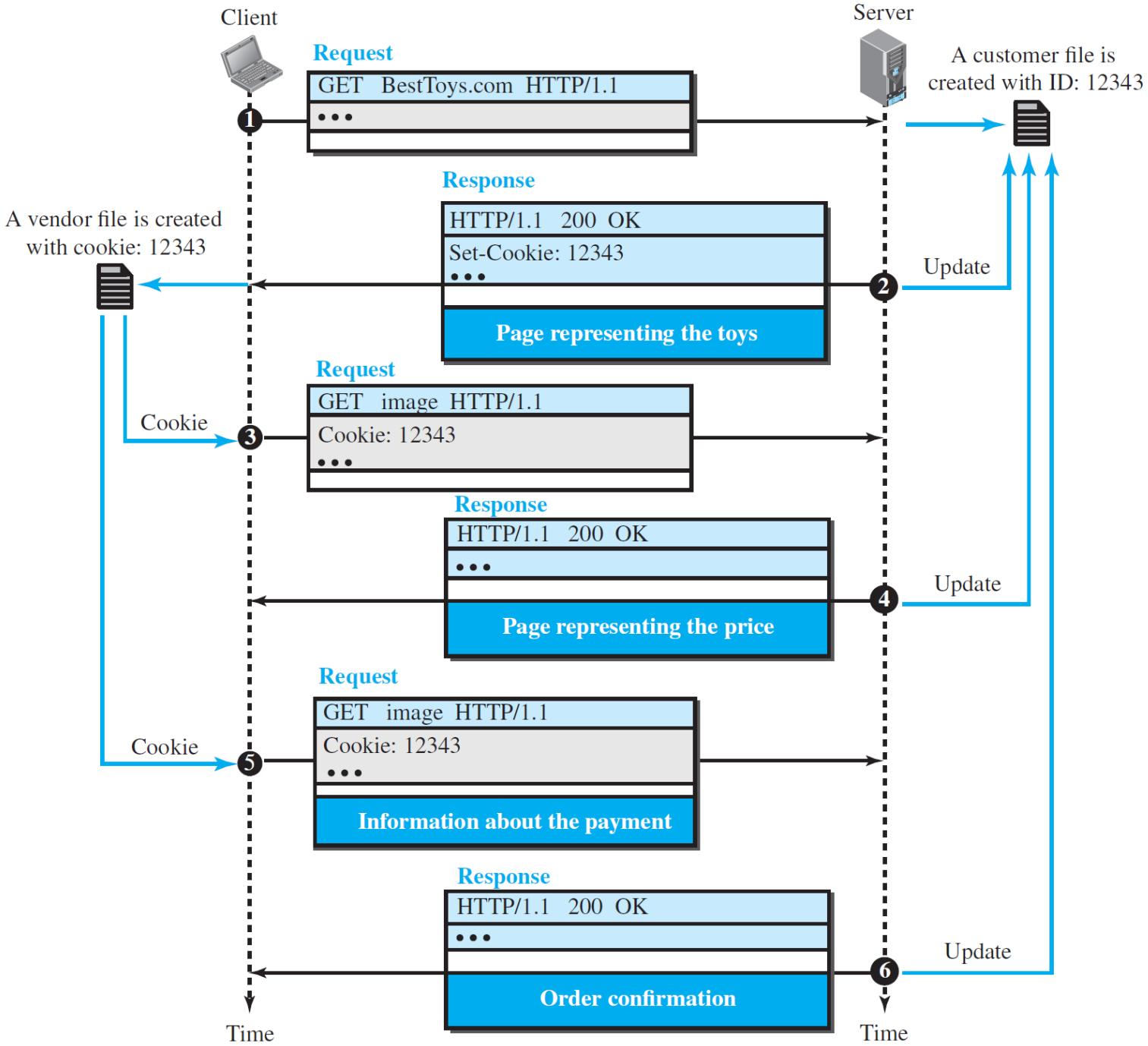
Client
Server
Request
GET BestToys.com HTTP/1.1
• • •
A customer file is created with ID: 12343
Response
HTTP/1.1 200 OK
Set-Cookie: 12343
• • •
Page representing the toys
A vendor file is created with cookie: 12343
Update
Request
GET image HTTP/1.1
Cookie: 12343
• • •
Cookie
Response
HTTP/1.1 200 OK
• • •
Page representing the price
Update
Request
GET image HTTP/1.1
Cookie: 12343
• • •
Information about the payment
Cookie
Response
HTTP/1.1 200 OK
• • •
Order confirmation
Update
Time
Time

Using Cookies

- An ***electronic*** *store* (**e-commerce**) can use a cookie for its client shoppers.
  - When the client **finishes** shopping and wants to check out, the last cookie is **retrieved** and the **total** charge is calculated.

- The site that **restricts** access to ***registered*** *clients* only **sends** a **cookie** to the client when the client **registers** for the first time.

Using Cookies

- A web ***portal*** uses the cookie in a similar way of registered users.
- A cookie is also used by ***advertising*** agencies.

Web Caching: Proxy Servers

- A **proxy** server is a **computer** that **keeps copies** of **responses** to **recent** requests.

- The proxy server **reduces** the **load** on the **original server**, **decreases traffic**, and **improves latency**.

Proxy Server Location

– We can have a **hierarchy** of **proxy** servers, as shown below:

- A **client computer** can also be used as a **proxy** server.
- In a company, a **proxy** server may be installed on a **computer** in the company LAN.
- An **ISP** with many customers can install a **proxy** server.

Usage of Proxy Server

- To use the proxy server, the **client** must be **configured** to **access** the proxy **instead** of the target server.
- When an HTTP **request** is created by any of the clients the request **is first directed** to the proxy server.
- If the proxy server **already** has the corresponding web page, it sends the **response** to the client.
- **Otherwise**, the proxy server **acts as a client** and sends the request to the web server in the Internet.

Example of a Proxy Server

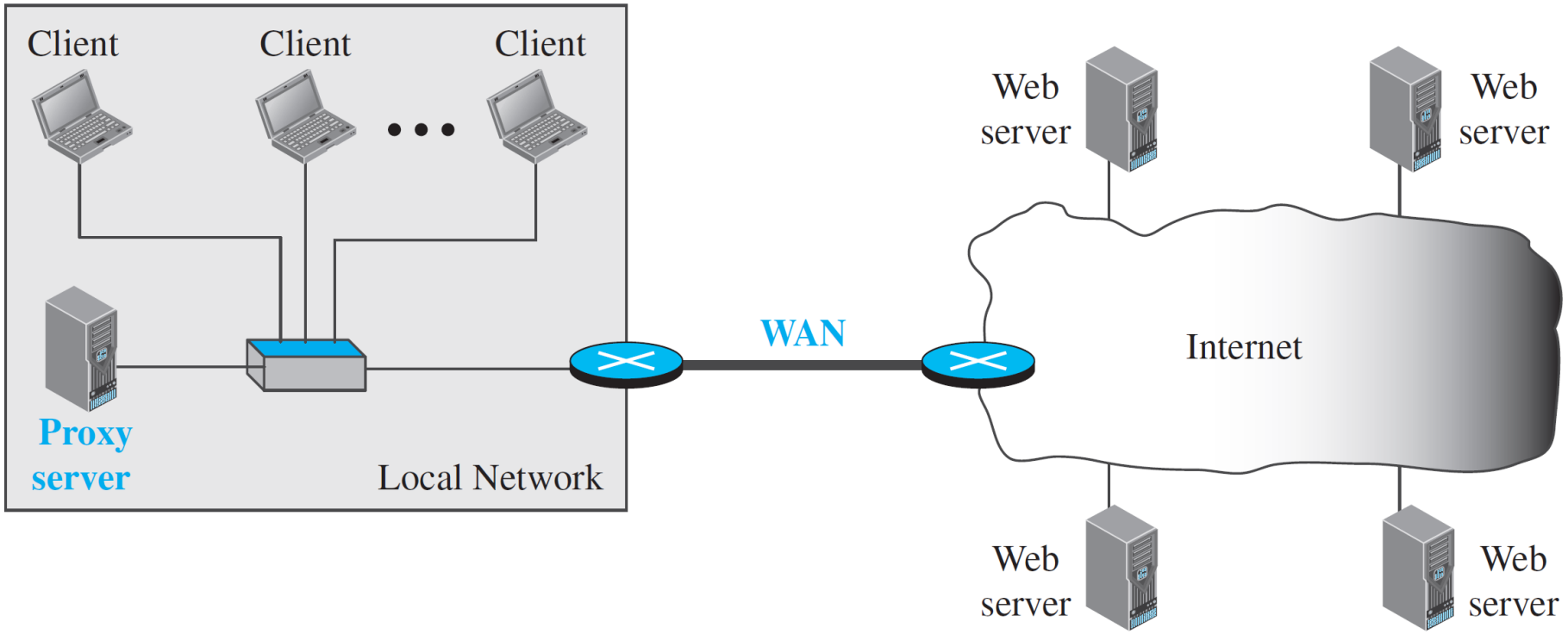

Proxy configuration in Windows 10

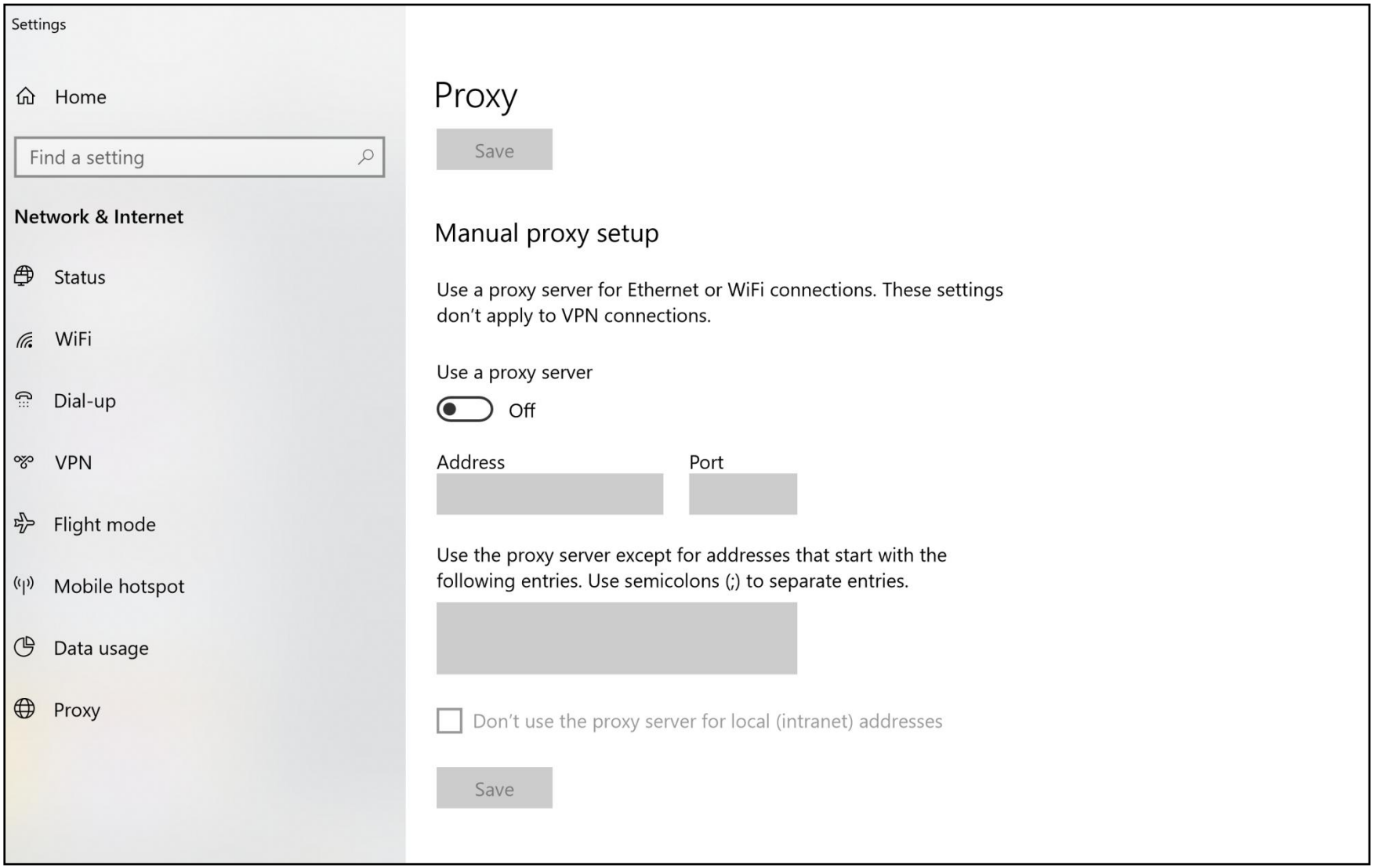

Cache Update

- A very **important question** is **how long** a **response** should **remain** in the proxy server before being **deleted** and **replaced**?

- One **solution** is to **store** the **list of sites** whose information **remains** the **same** for a while.

- Another **solution** is to **keep** in the cache the **most visited sites** and then **delete** the **least** visited sites.

HTTP Security

- HTTP **does** not **provide** security.
- HTTP can be **run over** the Secure Socket Layer (**SSL**).
- In this case, HTTP is **referred** to as **HTTPS**.

Discussion